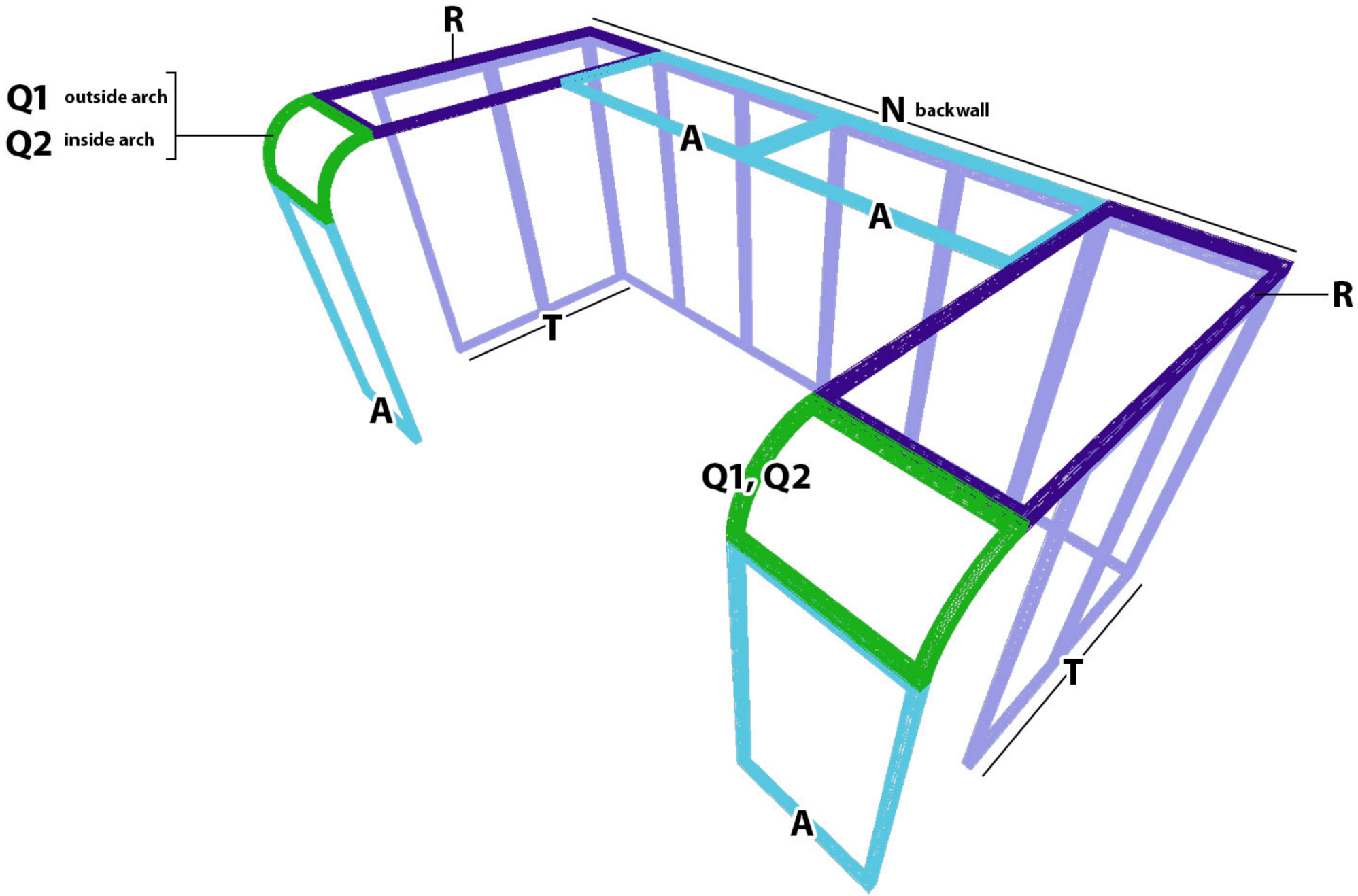
R
Q1 outside arch
Q2 inside arch
N backwall
A
A
T
A
R
Q1, Q2
T
A

FULL COLOR BLEED

# FRAME A
# 39.125” x 78.125”H

**Print Size with bleed:** 40.125” x 79.125”H
DESIGN TO ENTIRE DOCUMENT
**Yellow Safe Area:** 33.125“ x 72.125”H

**ANY CONTINUOUS ARTWORK TO MATCH OR LINE UP WITH ANOTHER PRINT MAY NOT LINE UP PERFECTLY**

**Keep important text/information within yellow safe area.**
ARTWORK IN RED AREA WILL PRINT BUT IS IN RISK OF BEING CLOSE TO THE EDGE OR TRIMMED OFF.

**Graphic Specifications:**
- Create to template specs
- 125 DPI resolution
- CMYK color
- No template lines
- Embed / link all images
- Create to outline all fonts

**Acceptable file formats:**
- Photoshop (.psd, .psb)
- Illustrator (.ai, .eps)
- flattened .TIFF
- press quality .PDF

FULL COLOR BLEED
FULL COLOR BLEED
FULL COLOR BLEED
AS - 05.01.19

# FRAME N
# 234.375” x 95.25”H

**Print Size with bleed:** 235.375” x 96.25”H
DESIGN TO ENTIRE DOCUMENT
**Yellow Safe Area:** 224.375“ x 89.25”H

**ANY CONTINOUS ARTWORK TO MATCH OR LINE UP WITH ANOTHER PRINT MAY NOT LINE UP PERFECTLY**

**Keep important text/information within yellow safe area.**
ARTWORK IN RED AREA WILL PRINT BUT IS IN RISK OF BEING CLOSE TO THE EDGE OR TRIMMED OFF.

**Graphic Specifications:**
- Create to template specs
- 125 DPI resolution
- CMYK color
- No template lines
- Embed / link all images
- Create to outline all fonts

**Acceptable file formats:**
- Photoshop (.psd, .psb)
- Illustrator (.ai, .eps)
- flattened .TIFF
- press quality .PDF

# FRAME Q1

**1/4 Curved Frame 39” - Outside**
**38.625” x 30”H**

**Print Size with bleed:** 39.625” x 31”H
DESIGN TO ENTIRE DOCUMENT
**Yellow Safe Area:** 34.625“ x 26”H

**ANY CONTINUOUS ARTWORK TO MATCH OR LINE UP WITH ANOTHER PRINT MAY NOT LINE UP PERFECTLY**

**Keep important text/information within yellow safe area.**
ARTWORK IN RED AREA WILL PRINT BUT IS IN
RISK OF BEING CLOSE TO THE EDGE OR TRIMMED OFF.

**Graphic Specifications:**
- Create to template specs
- 125 DPI resolution
- CMYK color
- No template lines
- Embed / link all images
- Create to outline all fonts

**Acceptable file formats:**
- Photoshop (.psd, .psb)
- Illustrator (.ai, .eps)
- flattened .TIFF
- press quality .PDF

AS - 08.15.19

# FRAME Q2

## 1/4 Curved Frame 39” - Inside
## 38.625” x 26.75”H

**Print Size with bleed:** 39.625” x 27.75”H
DESIGN TO ENTIRE DOCUMENT
**Yellow Safe Area:** 34.625“ x 23.75”H

**ANY CONTINUOUS ARTWORK TO MATCH OR LINE UP WITH ANOTHER PRINT MAY NOT LINE UP PERFECTLY**

**Keep important text/information within yellow safe area.**
ARTWORK IN RED AREA WILL PRINT BUT IS IN
RISK OF BEING CLOSE TO THE EDGE OR TRIMMED OFF.

**Graphic Specifications:**
- Create to template specs
- 125 DPI resolution
- CMYK color
- No template lines
- Embed / link all images
- Create to outline all fonts

**Acceptable file formats:**
- Photoshop (.psd, .psb)
- Illustrator (.ai, .eps)
- flattened .TIFF
- press quality .PDF

AS - 08.15.19

FULL COLOR BLEED

# FRAME R
# 39.125” x 97.75”H

**Print Size with bleed:** 40.125” x 98.25”H
DESIGN TO ENTIRE DOCUMENT
**Yellow Safe Area:** 33.125“ x 89.75”H

**ANY CONTINUOUS ARTWORK TO MATCH OR LINE UP WITH ANOTHER PRINT MAY NOT LINE UP PERFECTLY**

**Keep important text/information within yellow safe area.**
ARTWORK IN RED AREA WILL PRINT BUT IS IN RISK OF BEING CLOSE TO THE EDGE OR TRIMMED OFF.

**Graphic Specifications:**
- Create to template specs
- 125 DPI resolution
- CMYK color
- No template lines
- Embed / link all images
- Create to outline all fonts

**Acceptable file formats:**
- Photoshop (.psd, .psb)
- Illustrator (.ai, .eps)
- flattened .TIFF
- press quality .PDF

FULL COLOR BLEED
FULL COLOR BLEED
FULL COLOR BLEED

AS - 07.24.19

FULL COLOR BLEED

# FRAME T
# 78.25” x 95.25”H

**Print Size with bleed:** 79.25” x 96.25”H
DESIGN TO ENTIRE DOCUMENT
**Yellow Safe Area:** 72.25“ x 89.25”H

**ANY CONTINUOUS ARTWORK TO MATCH OR LINE UP WITH ANOTHER PRINT MAY NOT LINE UP PERFECTLY**

**Keep important text/information within yellow safe area.**
ARTWORK IN RED AREA WILL PRINT BUT IS IN
RISK OF BEING CLOSE TO THE EDGE OR TRIMMED OFF.

**Graphic Specifications:**
- Create to template specs
- 125 DPI resolution
- CMYK color
- No template lines
- Embed / link all images
- Create to outline all fonts

**Acceptable file formats:**
- Photoshop (.psd, .psb)
- Illustrator (.ai, .eps)
- flattened .TIFF
- press quality .PDF

FULL COLOR BLEED
FULL COLOR BLEED

AS - 05.06.19

FULL COLOR BLEED